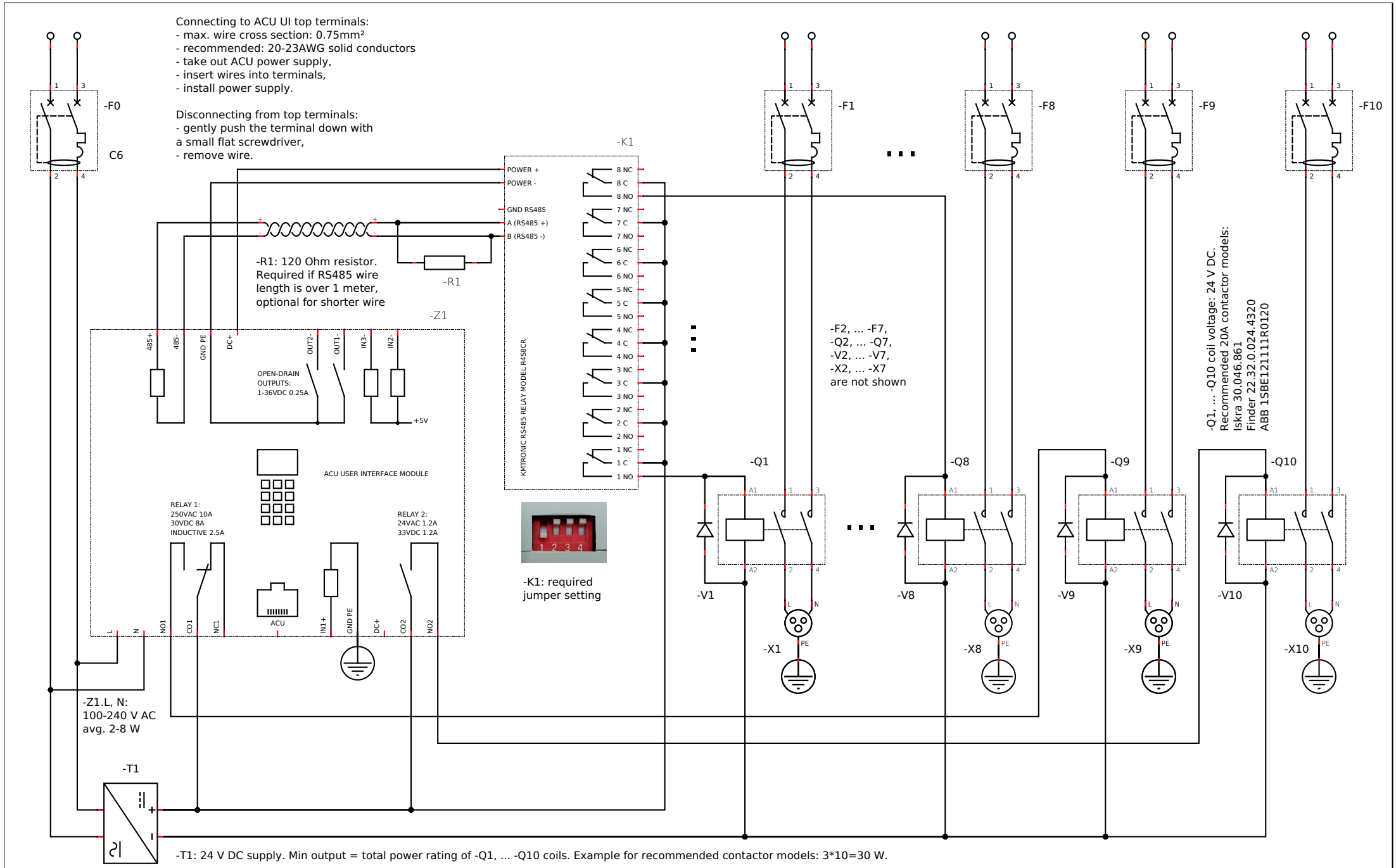

GOMARINA	Access Control Unit (ACU) Wiring Diagram	Date: 7/9/22
www.gomarina.com	Power Post with Ten Outlets and 24 V DC Contactors	Chart: P3